SECTION ONE

USING HANDCHIMES - AN INTRODUCTION

I

HISTORY OF HANDCHIMES

ORIGIN

The concept of a hand-held split tube that is capable of producing a musical sound is thousands of years old. The first record of such a tube being used places its beginnings in Southeast Asia. At that time, the tube was made from a length of bamboo with the natural membrane of the bamboo (node) creating a stopped tube effect.

Today, the peoples of Southeast Asia and some parts of China continue to make and use these bamboo tubes. They can be "played" by holding the tube and striking it against a fixed object, thus causing the bamboo to vibrate and emit a sound. Some people have also devised the system of holding the tube and striking it with a stick.

EVOLUTION OF DEVELOPMENT

In 1894, Edward Gerry was granted a patent for a tubular resonator that was made of metal and had an adjustable, locatable plug. This was the first patent on a chime-like metal tube that used a "stopped pipe" effect.

In the late 1800's, John Deagan visited Southeast Asia and saw the split bamboo tubes that were being used to create a chime-like instrument. In 1900, Deagan patented the first metal slotted tube. This tube featured a tuned tine and a fixed plug combining the practices of the Southeast Asian people (the split tube) and the invention of Gerry (the fixed plug). For the first time the tuned, slotted metal tube was being made.

In 1910, William Bartholomae patented a toy based on the slotted tube, which did not claim to have any musical use. He added an external device to strike the tube, thus making it sound as the toy moved. This was the first clapper mechanism.

Earl Sanders made an important contribution to the evolution of handchimes with his 1939 patent. Though this patent included a tube that was slotted at both ends (an idea that was not successful), it also included changing the shape of the tube from round to square. This new shape played an important role in the development of the handchime as we know it today.

In *Vibrations* by David Sawyer (Cambridge University Press, 1977, pages 24-25), a square metal-slotted tube is described. This "metal bonca" is depicted as a variation of the "bamboo bonca" of Asia. By attaching an external "spring metal ringer" to the tube, the English handchime was created.

Toby Harris Smith made chimes in England and distributed them in the United States. These instruments were not successful, forcing Smith into bankruptcy.

In 1981, Jacob Malta began experimenting with the English handchimes that Smith had provided to him. He tried many different types of metal before finally settling on aluminum. He also worked with both round and square shaped tubes. Due to the additional overtones created by the rounded tubes, he decided to produce square shaped chimes.

Malta marketed his first chimes in 1982 under the trademarked name CHOIRCHIME ®. Though there have been some changes in the design of this instrument since 1982, it is still marketed today in nearly its original form by Malmark, Inc.

In 1985 Suzuki introduced another version of the handchime to the American market. Although they use a round tube, these chimes are clearly based on the developments and improvements that were introduced by Malta.

II

WHAT IS A HANDCHIME?

Handchimes are simple instruments. They are, in fact, large aluminum tuning forks. The aluminum is extruded into long tubes, which are cut to various lengths; the size of the tubing, length and diameter, determines the pitch of the chime.

There are currently two manufacturers of handchimes. The basic principle of design in both chimes is the same. The differences come primarily in the gauge of aluminum and other materials that are used and in the shape of the tubing.

THE MALMARK CHOIRCHIME ®

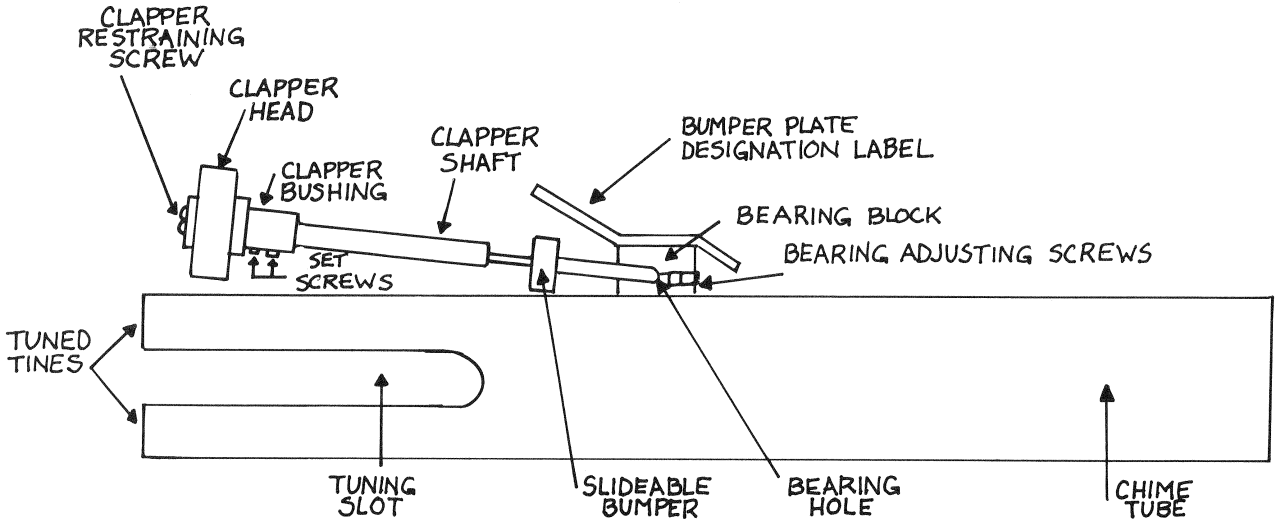

Diag. 1

This illustration is representative of most of the Malmark CHOIRCHIMES ® . Some differences in the clapper mechanism do occur with various pitched chimes.

THE SUZUKI TONECHIME

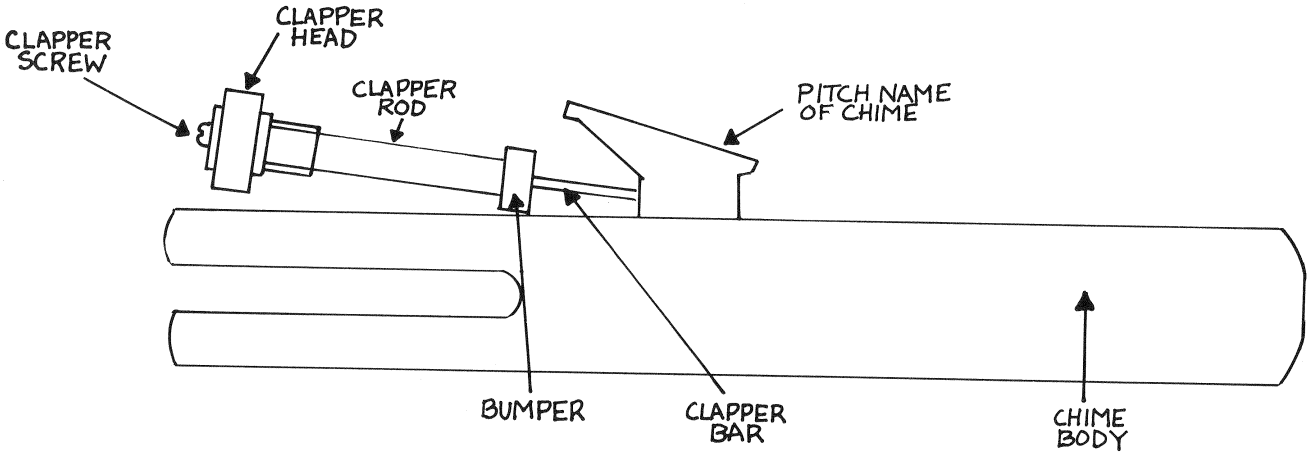

Diag. 2

This illustration is representative of most of the Suzuki TONECHIMES . Some differences in clapper mechanism do occur with various pitched chimes.

ADJUSTMENTS THE TEACHER/DIRECTOR CAN MAKE

Handchimes have an external clapper mechanism. The shaft of the clapper is a flexible wire; therefore, it can be bent if ringers pull on the clapper. If the clapper shaft does become bent, the director can reshape it by applying gentle pressure.

At the base of the clapper shaft, there is a small black rubber bumper which is movable. The purpose of this bumper is to keep the clapper head from resting on the chime tubing, thus restricting the vibration of the chime. Avoid rotating the bumper on the clapper shaft: this causes the clapper head to rest on the chime, thus damping the sound. This bumper can, however, be moved up and down the clapper shaft slightly to affect the distance of the clapper head from the tubing. It is best to leave the bumper in the factory-set position, tightly against the clear sheath which covers the clapper shaft. Some directors feel that moving the bumper is a way to gain more dynamic control over the chime. This control, however, can and should be taught to the ringers as part of their ringing technique. If a ringer has a physical problem that makes this control difficult, adjustments to the bumper may be helpful.

The clapper head is formed with multiple openings. Although this may lead a teacher/director to think that the head is adjustable, it is not intended to be moved. The clapper heads are set at the factory according to the pitch of the chime and should be left in the same position at all times.

The pitch designation plate is covered by a sticker which tells the pitch name of each chime and shows the pitch location on the staff. Underneath this sticker, there are two screws which hold the entire clapper assembly to the tubing. If this should become loose, the sticker may be removed to tighten the screws. If the chimes are properly cared for, this type of adjustment should rarely be necessary.

If ringers place their thumbs on the pitch designation sticker, they may, in time, rub the sticker off the chime. New stickers are available from the manufacturers.

Handchimes have two bearing screws. The tension created by these screws on small ball bearings controls the movement of the clapper assembly. If a clapper becomes loose and noisy, these two screws need to be tightened. If, however, the clapper seems sticky and hard to move, these screws need to be loosened. Using the hex key that is provided by the manufacturer and holding the chime in a horizontal position, raise the clapper with one hand while tightening one of the bearing screws. Tighten the screw until it holds the clapper off the surface of the chime. Now loosen the bearing screw slowly until the clapper head freely falls toward the chime. Repeat this process with the second bearing screw. Properly adjusted, handchimes should have smoothly moving clappers and should not produce extraneous clapper noise.

SPECIAL PROBLEMS

There are two things that can happen to a handchime and cannot be repaired by the director/teacher. These do require that the chime be sent back to the factory for proper repair or replacement. Be sure, when purchasing chimes, that the manufacturer offers this support to its customers.

CHIME SOUNDS FLAT

The bottom of the slot in the vibrating end of the chime is vulnerable to cracking. This is not a frequent problem, but it can occur, especially if the chimes are played against the table (martellato technique) or dropped. If a crack occurs, it will usually not be visible to the naked eye, but the tone of the chime will go flat instantly. This is not a change in volume of the chime, but rather a definite change in pitch. A cracked chime cannot be repaired, it must be replaced.

CHIME LOSES VOLUME

Handchimes are stopped tubes, having a large plug inside the tube visible from the non-vibrating end. The pitch of the chime is determined by the size of the tube and the slot that is cut into the top end of the tube. The volume of the chime is dependent upon the placement of this plug. The plugs are not glued into place; therefore, over time, they may move slightly. If the chime seems to lose volume, it probably means the plug has moved. This is an easy adjustment but does require a factory-trained person to reset the plug properly.

III

OCTAVE DESIGNATIONS

Handchimes are numbered to identify their location on the musical staff. The numbering system used for handchimes is the same as the one used for American-made handbells.

Handchimes are a transposing instrument. This is important to remember when playing with other instruments or accompanying a choral group. Music for handchimes is written an octave lower than it sounds, thus avoiding excessive ledger lines in the musical score.

The octave designations correspond to the octaves on a keyboard. The numbers change on every "C", with all the chimes in the same octave having the same number. C5 is middle C.

Several techniques may be used to teach new ringers the numbering system:

1. Make a large bulletin board or poster for the rehearsal room, showing the staff and pitch designations.
2. Teach ringers to refer to their chimes by the letter and number designations. This will avoid confusion with chimes of the same letter name in other octaves.
3. Be sure to use the full name (letter and number) of each chime when instructing the ringers.
4. Play a game, asking ringers to name the note on a given line or space.
5. Reverse this game and ask ringers to tell where (on which line or space) a specific note is located.

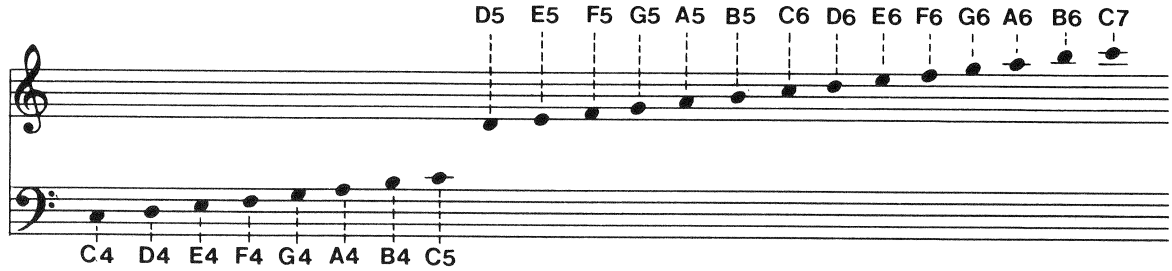

Diag. 3

IV

BASIC EQUIPMENT

In order to determine what basic equipment is necessary to begin a handchime program, it is important to consider the intended use of the chimes. If the chimes are being purchased for a church or school program where they will be used as an ensemble instrument, the accessories needed will be much the same as those used for a handbell choir. If there is already a handbell program established, it will probably be unnecessary to purchase any further accessories for the handchimes.

If the chimes are intended for use in the general music classroom and not as an ensemble instrument, very few accessories will be needed.

HANDCHIMES

Handchimes are usually purchased by the octave. A two-octave set contains 25 notes and a three-octave set contains 37 notes. For lower elementary age ringers, a two-octave set of handchimes is sufficient. The bass chimes in a three-octave set may be difficult for young ringers to handle and damp properly.

For ringers of upper elementary age and older, a three-octave set of chimes is recommended. For chimes that are going to be used by ringers of a wide-age range, a three-octave set should also be purchased. The two octaves within the larger set will be available for the younger ringers while still providing three octaves for the older ringers.

CASES

Handchimes come in cases which are specially fitted for the chimes. To protect the chimes, it is necessary to keep them in the cases whenever they are not in use. Be sure to read the manufacturer's directions concerning the use of the case. Proper closing will prevent the chimes from "spilling" out and being damaged.

TABLES

Chimes may either be placed on standard-size banquet tables, or on special tables designed for handbell choirs. Although banquet tables represent a savings of money (assuming the church or school already owns them), there may be a problem with portability. The weight of these tables often makes it difficult for a director or young ringer to set them up. Moreover, the problem is seriously compounded if the rehearsal room is on a different level than the sanctuary or performance hall. Some custom-made handbell tables are easier to transport, but this is not true of all handbell tables identified as "portable".

There are several styles of custom-made handbell tables. Two popular varieties are: a six-foot table that folds in half for easy storage and transportation; and a table with angled ends, adjustable legs, and permanent music racks. Tables are also available in three-foot lengths, which may offer needed flexibility in crowded sanctuaries and small classrooms.

A standard banquet table is 29 inches high and 30 inches wide. Although many bell tables are the same height, some are considerably higher. This extra height may be appreciated by taller people, but does not work well for shorter people or children.

Banquet tables are commonly available in eight-foot lengths. While these can be used for chime ringing, the length may be cumbersome when arranging them in the sanctuary or classroom. Six-foot and three-foot tables are recommended. These will provide the most flexibility. NOTE: If portable tables are to purchased, be sure they are sturdy while still lightweight. Avoid aluminum picnic-style tables, as they bend easily and will not withstand hard use by young ringers.